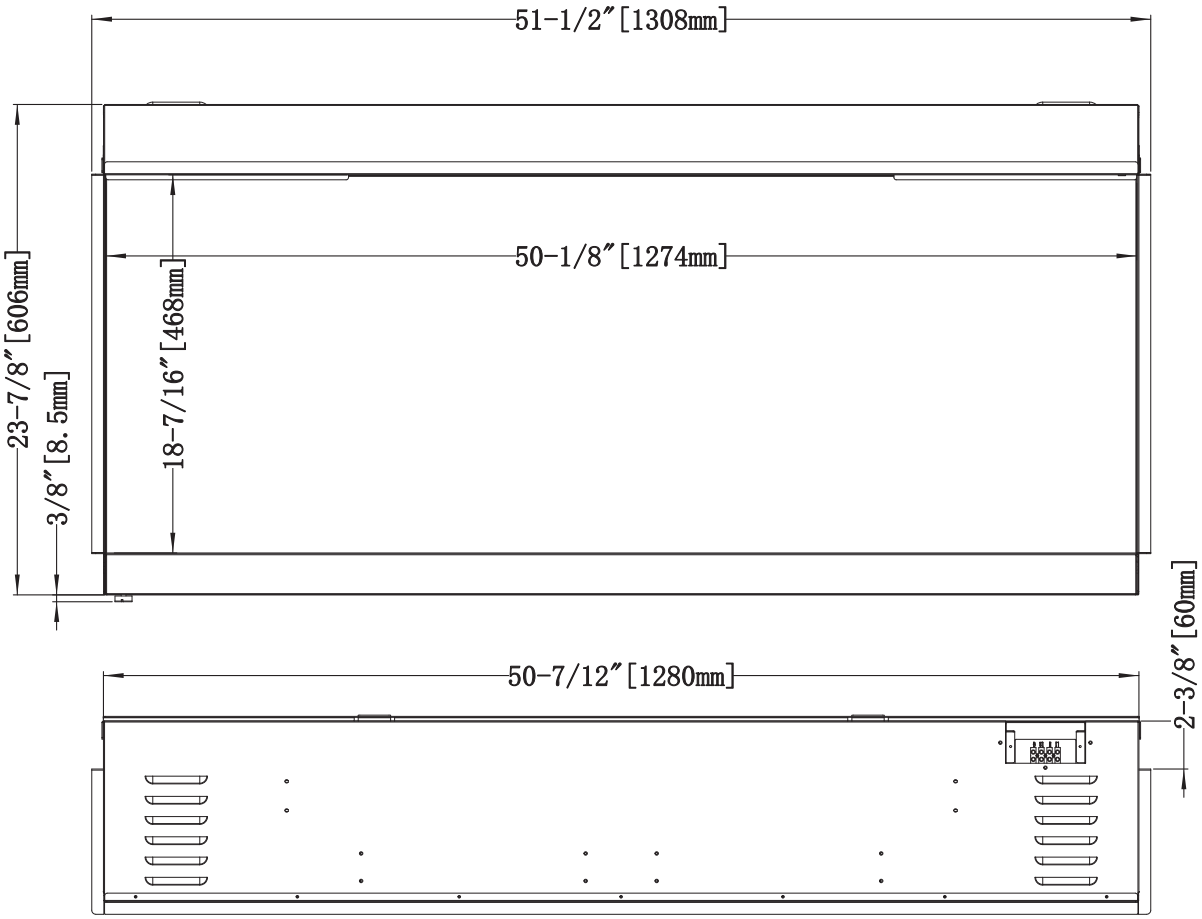
51-1/2″[1308mm]
50-1/8″[1274mm]
23-7/8″[606mm]
3/8″[8.5mm]
18-7/16″[468mm]
50-7/12″[1280mm]
2-3/8″[60mm]

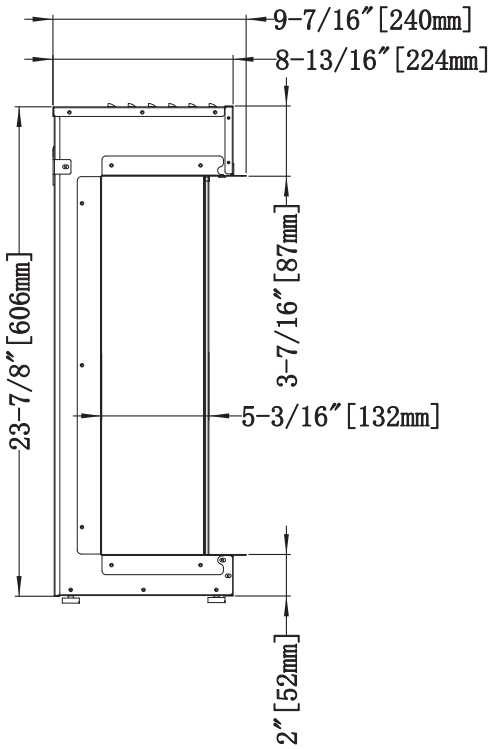
9-7/16″[240mm]
8-13/16″[224mm]
23-7/8″[606mm]
3-7/16″[87mm]
5-3/16″[132mm]
2″[52mm]